Engineering Release Notice (ERN)	Location	Change description	P/A: Modified	Document / sheet status
		Added Deleted Modified	D 4 5 Modified MD	RELEASED
				Date / Modification count

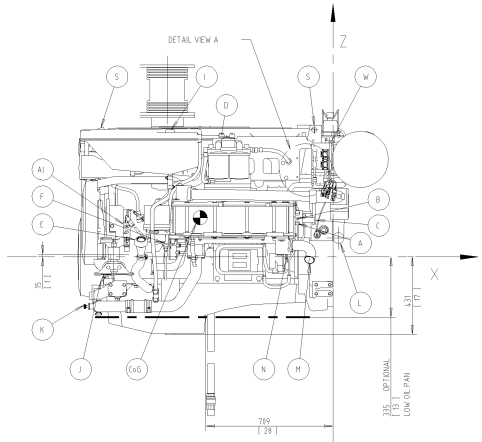

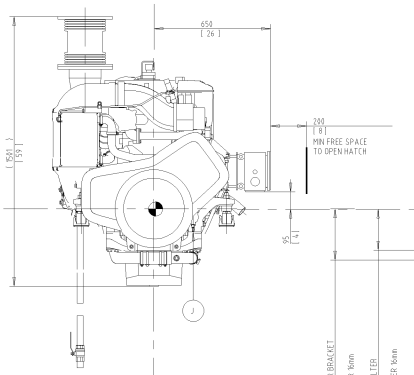

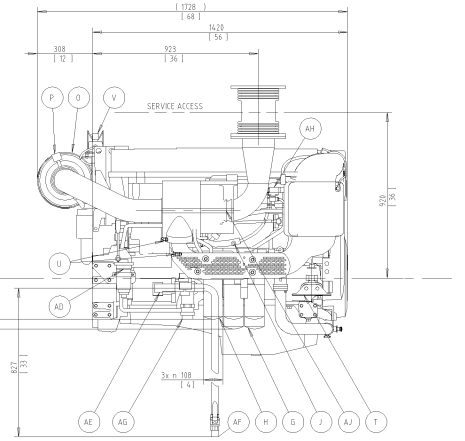

REAR END OF FLYWHEEL HOUSING

285 WITH SHIFTABLE OIL FILTER BRACKET
[11] MIN CLEARANCE TO REMOVE FILTER 16mm

228 STANDARD MOUNTED OIL FILTER
[9] MIN CLEARANCE TO REMOVE FILTER 16mm

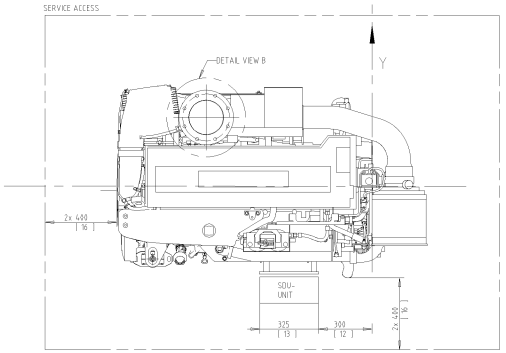

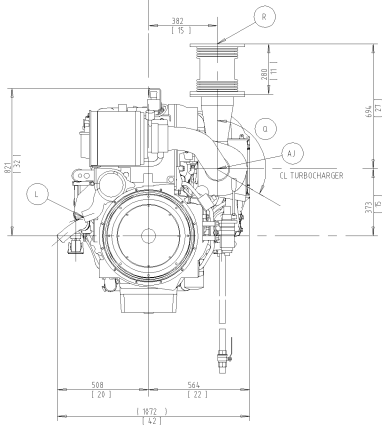

(A) FUEL CONNECTION INLET 1/4-18 NPTF
(B) FUEL CONNECTION OUTLET 1/4-18 NPTF
(C) FUEL PRIMER PUMP
(D) TWIN FUEL FILTER, SHIFTABLE
(E) OIL FILLER
(F) OIL DIPSTICK
(G) OIL FILTERSx2, (OPTIONAL WITH SHIFT VALVE)
(H) OIL FILTER BYPASS
(I) HT WATER FILLER
(J) HT WATER DRAIN POINTx2 1/8-27 NPTF
(K) HT WATER DRAIN POINT TEMA 18418MN3.C
(L) LT WATER INLET PUMP n 63 O.D PIPE
(M) LT WATER OUTLET n 54 O.D PIPE
(N) LT WATER DRAIN POINTx1 1/8-27 NPTF
(O) AIR FILTER ENGINE
(P) PRESSURE DROP INDICATOR, AIR FILTER
(Q) TURNABLE EXHAUST BEND 120 ~
(R) FLEXIBLE COMPENSATOR EXHAUST SYSTEM n 7" (OPTIONAL)

X, Y, Z, DIM FROM CRANSHAFT CENTER AND
REAR END OF FLYWHEEL HOUSING OF ENGINE

(A) -X200 -Y370 +Z185
(B) -X200 -Y380 +Z210
(A)(B) CONNECTION FOR FUEL HOSE L=550mm
HOSE END TO CUSTOMER INTERNAL M18x1.5 (DIN3863)
(L) +X30 -Y360 +Z105 (TURNABLE)
(M) -X125 -Y520 -Z75 (TURNABLE)
(R) -X920 +Y380 +Z1070
(X) -X175 -Y240 +Z575
(Y) -X175 -Y240 +Z535
(Z)(AA)(AB)(AC) -X45 -Y370 +Z350
(AH) -X960 +Y315 +Z490
(AI) -X970 -Y420 +Z370
(AJ) -X745 +Y385 +Z380 (TURNABLE)
(CoG) -X740 -Y10 +Z215

(S) LIFTING EYESx3 n 30MM
(T) ENGINE SUSPENSION
(U) CONNECTION BATTERI POS. AND NEG. M12 SCREW
(V) EMERGENCY STOP
(W) POWER CONTROL MODULE
(X) CONNECTOR A
(Y) CONNECTOR B
(Z) WIF CONNECTOR
(AA) CONNECTOR EXTERNAL STOP
(AB) CAN 2
(AC) CONNECTOR EASY LINK
(AD) MANUAL OIL DRAIN PUMP, 20mm I.D HOSE (OPTIONAL)
(AE) AIR STARTER MOTOR (OPTIONAL)
(AF) AIR STARTER CONNECTION, FERRULE FITTING n 28MM PIPE
(AG) ENGINE HEATER 220V (OPTIONAL)
(AH) ENGINE COOLANT SHUTDOWN SWITCH (OPTIONAL)
(AI) ENGINE OILPRESSURE SHUTDOWN SWITCH (OPTIONAL)
(CoG) CENTRE OF GRAVITY

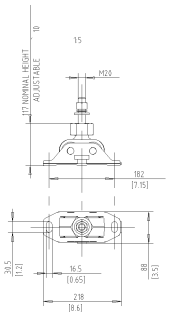

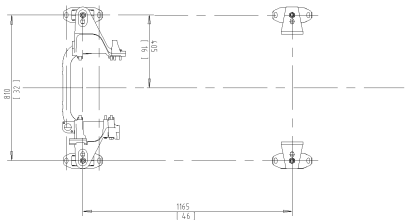

Detail View B
15

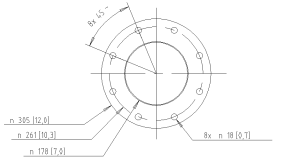

Detail View A
15

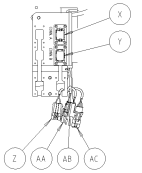

DRY WEIGHT 1520 KILOGRAM
OIL CAPACITY AND COOLING WATER CAPACITY SEE DATA SHEET

SCALE: 1:10

SYMBOLS, DESIGNATIONS AND GENERAL DRAWING PRINCIPLES (STD 181-0001)

The copying, distribution and utilization of this document as well as the communication of its contents to others without express authorization is prohibited. Offenders will be held liable for payment of damages. All rights are reserved in the event of the grant of a patent, utility model or ornamental design registration.

VOLVO PENTA

Document title
ENGINE DIMENSIONS
D13 MH HE BOBTAIL
AIR/EL STARTER

Document type
DIMENSION DRAWING

Parent manual/document number

Document No	Versio Index	Sheet No
21693394	04	1/1

SIZE A4